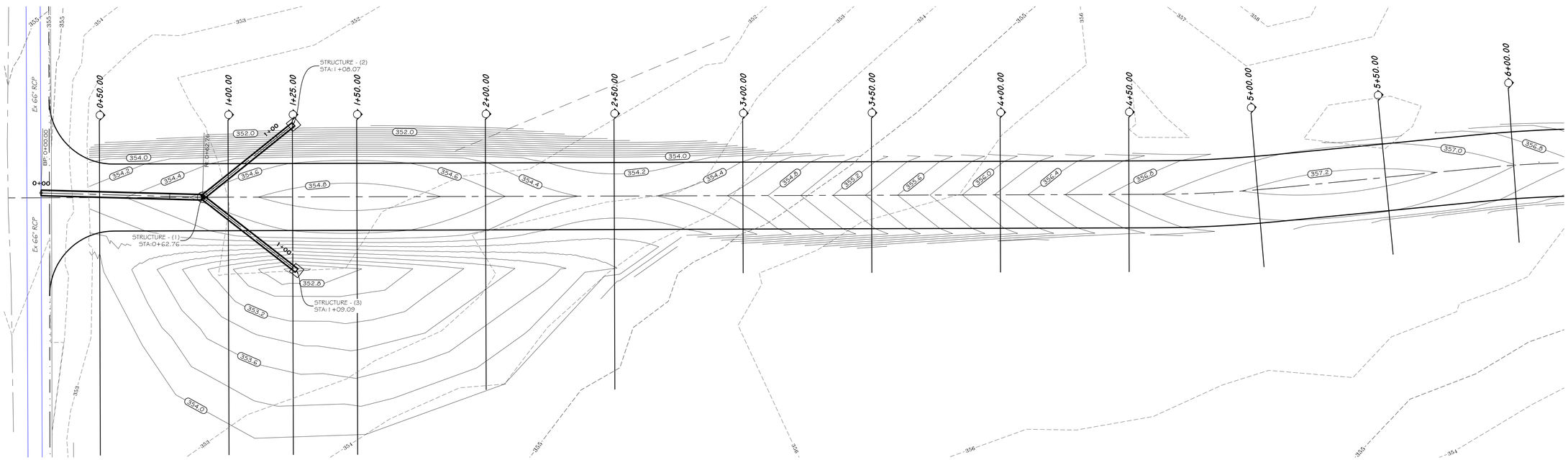

TRADE AVE DRAINAGE

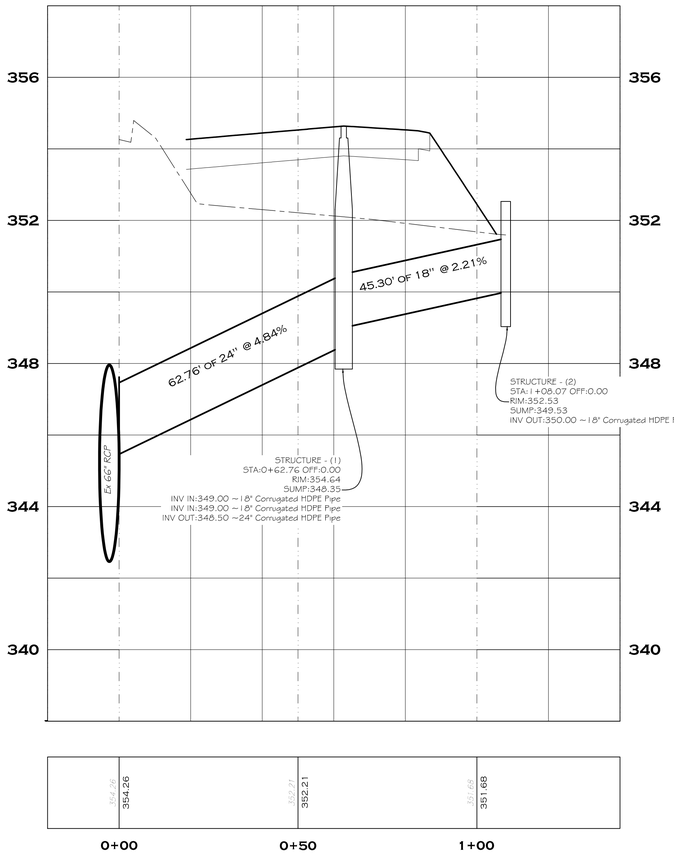

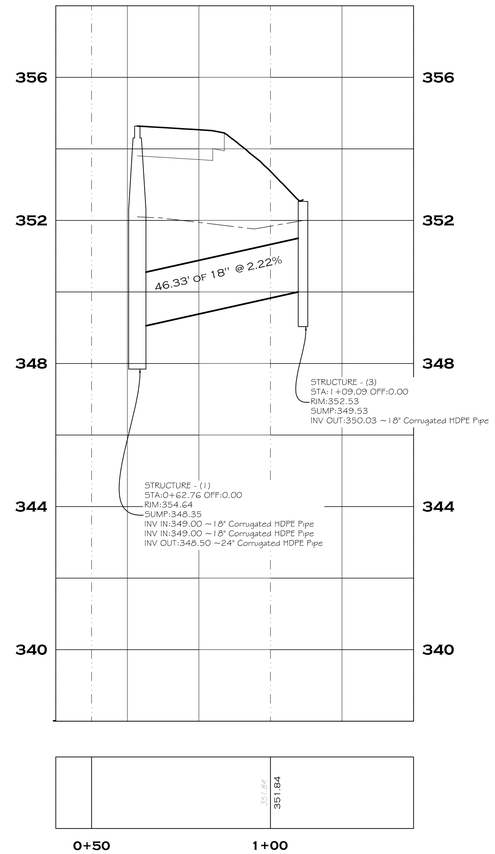

Structure Table	
Structure Name	Details
Structure – (1)	RIM = 354.639 SUMP = 348.346 INV IN = 349.000 INV IN = 349.000 INV OUT = 348.500
Structure – (3)	RIM = 352.530 SUMP = 349.530 INV OUT = 350.030
Structure – (2)	RIM = 352.530 SUMP = 349.530 INV OUT = 350.000

Pipe Network Table										
Pipe Name	Invert DS	Invert US	Length	Slope	Sta DS	Sta US	HGL DS	HGL US	Flow, Q25	Pipe Material/ Size
Pipe – (1)	345.47	348.50	60.89	4.84%	0+00.00	0+62.76	0.00	0.00	0.0	24 inch Corrugated HDPE Pipe
Pipe – (2)	349.00	350.00	42.35	2.21%	0+62.76	1+08.07	0.00	0.00	0.0	18 inch Corrugated HDPE Pipe
Pipe – (3)	349.00	350.03	43.38	2.22%	0+62.76	1+09.09	0.00	0.00	0.0	18 inch Corrugated HDPE Pipe

DESIGNED BY:	JEM
DRAWN BY:	JEM
CHECKED BY:	JEM
DATE:	1 1/1 1
FILE NO.	

CITY OF PLEASANTON
"Birthplace of the Cowboy"

108 SECOND STREET
PO BOX 209
PLEASANTON, TX 78064
830-569-3272
WWW.PLEASANTONTX.ORG

REV	DATE	DESCRIPTION

CITY OF PLEASANTON
TRADE AVE CONSTRUCTION
DRAINAGE PLAN AND PROFILE

SHEET NO.

4

OF: 4